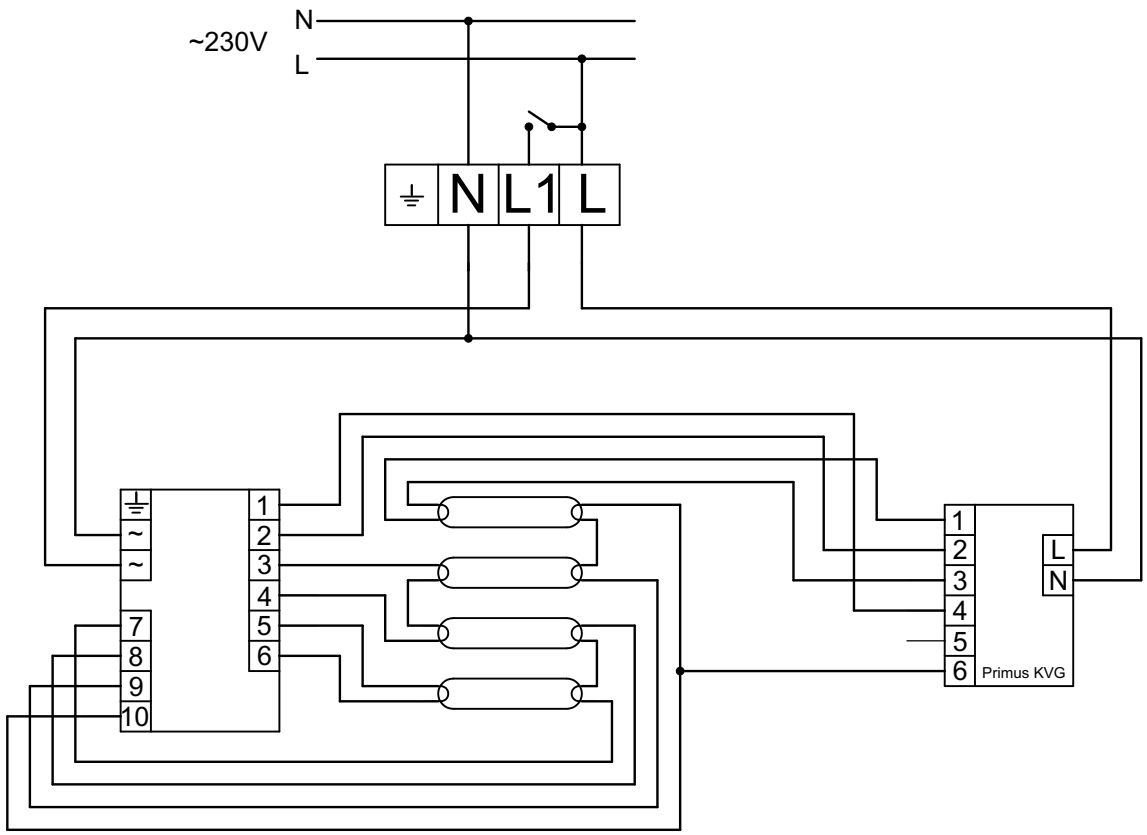

SCS18_4LR_01

Intelight	
SCS18_4LR_01	
2011-02-05 16:43:04	
Sheet: 1/1	